Optimization of Gas Turbine Combustors

An Integrated Design Approach for Gas-Turbine Combustors by means of Game-Theory Optimization Strategy

The present work describes a novel approach for the optimized design of gas turbine combustors, that integrates a 0-D code, CFD analyses and an advanced Multi Objective Game Theory optimization algorithm.

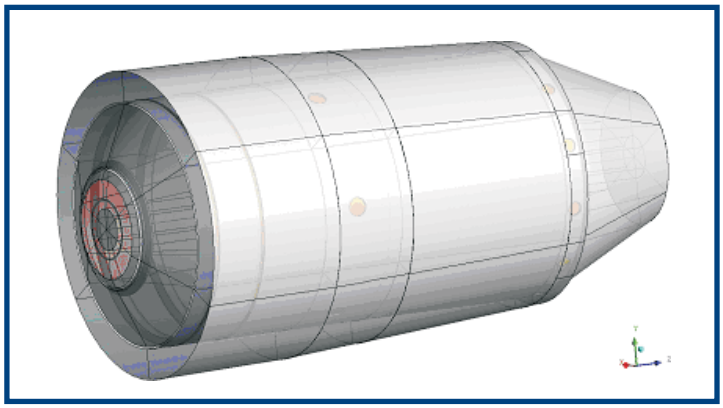

3D CAD model of the combustor

Methodology

A proprietary 0-D code produces the baseline design of any generic combustor, given the required performances of the G.T., the machine characteristics, the fuel type and properties, the basic geometry (tubular or annular) and the combustion concept (i.e. lean premixed primary zone or diffusive processes). The following step is the optimization of the baseline design. To that purpose, a parametric CAD and mesh model should be prepared, as well as the needed set of macros to run the CFD analysis and post-process the results in batch mode.

Free parameters of the optimization process are position and size of the liner holes arrays, their total area and the shape of the exit duct. The three different objectives are the minimization of NOx emissions, pressure losses (Dp) and combustor exit Pattern Factor (Paf). This last index is a measure of the temperature uniformity of the produced gas flow. The lower it is, the better it is, specially in terms of thermal stress for the following turbine blades.

The previously described approach was applied to the design of a tubular combustion chamber, with a lean premixed primary zone, for a recovery methane-fuelled small gas turbine of the 100 kW class. As a comparison term for the results, a similar combustor was chosen out of the recent technical literature (2004).

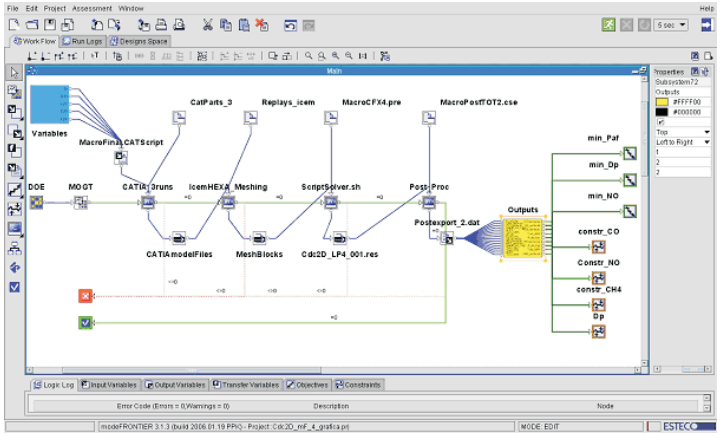

Optimization Workflow defined within modeFRONTIER

All the computational chain from the numerical definition of the variables' values to the results handling was automated by means of:

- a parametric CAD model of the device (CATIAv5 scripting language);
- a robust hexahedral multi-block meshing(ICEM CFD);
- a batch-mode use of the CFD solver, with automatic post-processing (ANSYS CFX).

The workflow automation and data handling, as well as the optimization engine, is provided by the modeFRONTIER optimization tool.
The time and computational resources constraints allowed the authors to perform not more than one hundred different design evaluations: for this reason the modeFRONTIER's efficient and robust Multi Objective Game Theory algorithm was selected.
The optimization was carried out in an automatic ad efficient way by modeFRONTIER, exploiting the distributed computing concept via queuing system. Parallelization was applied both to the single computation, both to the optimization itself.

modeFRONTIER® is a trademark of ES.TEC.O. srl, Italy

Results

- dry-low-emissions concept implemented;
- pressure losses less that 6%;
- high temperature uniformity in the outlet flow: Patter Factor reduced of 40% respect to the reference combustor.

	ΔP %	Ch_4 ppmvd@ 15%O_2	CO ppmvd@ 15%O_2	NO ppmvd@ 15%O_2	PaF
State-of-art combustor (same concept, Y2004)	>6	1.1e-2	1.6e-2	9.1	0.44
Optimized design	**5.9**	**4.6e-6**	**4.0e-1**	**11.6**	**0.25**

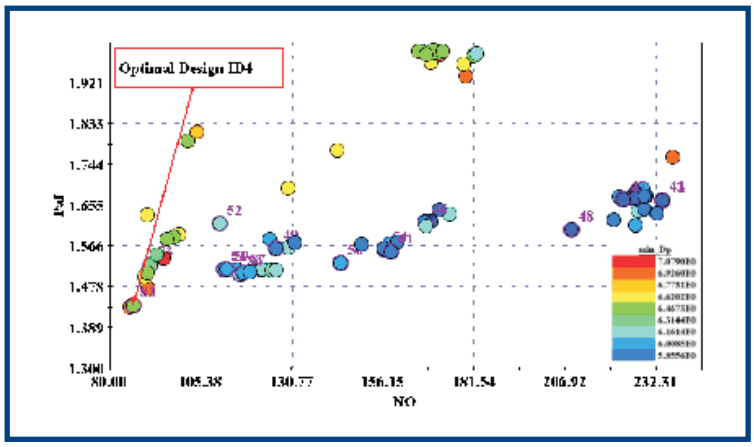

The computed designs in the space of the three objectives (each one to be minimized)

The statistical analysis tools of modeFRONTIER were used to perform sensitivity studies of the considered parameters on the combustor performances, while a stochastic robustness analysis of the found solution is currently under progress.

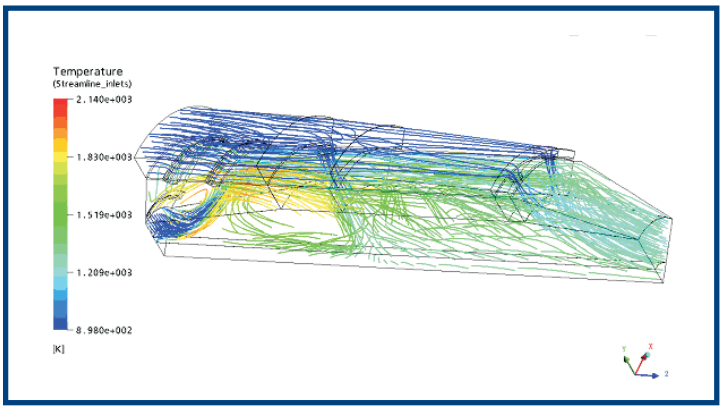

Streamlines representing temperature and flow-field of the optimized combustor sector

modeFRONTIER

modeFRONTIER provides a powerful and easy to use solution to include CAE software into an integrated design chain where CAD, FEM, CFD, cost prediction and Six-Sigma design are used simultaneously and in a distributed environment to push the envelope in product development.

modeFRONTIER includes a wide range of numerical methods for DOE, Robust Design, Optimization and data-modelling. A powerful post-processing and easy to use process flow integration greatly enhance both the engineers as well as the decision maker capability automating frequent tasks while filtering only useful information.

www.modefrontier.com

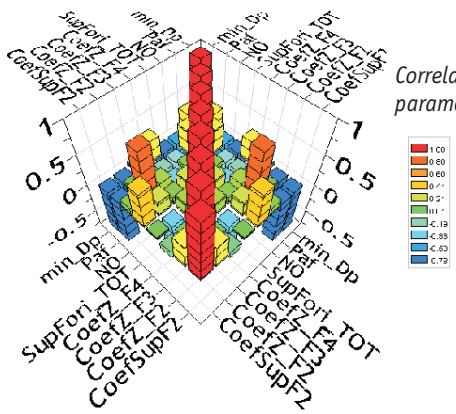

Correlations between some input parameters and objectives

modeFRONTIER® is a trademark of ES.TEC.O. srl, Italy